E. Mission Implementation

E.1 General Information

STEP is a 6-month mission in a shadow-free, sun-synchronous low earth orbit to test the Equivalence Principle. The vehicle will slowly roll about an axis normal to the earth's gravity gradient while pointing in the solar direction. The STEP instrument will be operated in the drag-free mode for the duration of a 5-day science measurement period before setting up a new condition.

STEP has a long history of technology development. It takes full advantage of past flight projects in General Relativity and the previous NASA technology investments of ~ $25M to reduce development risk. The instrument and spacecraft are designed as a unit, as described in section D. The payload is most of the spacecraft and provides a support structure for the service module in the launch environment. A major component of the payload is a liquid helium Dewar that maintains an instrument operating temperature below 2 K. The boil-off gas from the Dewar is used to provide drag-free and attitude control.

E 1.1 Mission Design

The low disturbance that can be achieved in space and existing technology provides the STEP experiment the optimum environment for an Equivalence Principle measurement. Ideally the test masses in an Equivalence Principle experiment should fall without disturbance from the measurement system or environment. In practice this is not usually possible, especially for very high sensitivity measurements, because of conflicting system requirements limiting performance. The STEP program treats the spacecraft design as a single system of which the payload is the central element to achieve the lowest disturbance environment achieved to date.

Table E. 1.1. Mission requirements are ordinary.

General Information	Details
Launch date	~June 15, 2013
Launch Flexibility	3 mos then
	3 mos delay
Mission Duration	6 months
Orbit type	Circular
Orbit info	550 km Sun sync
Ground Station	EPGN
MOC	Stanford

Interfaces between the Service Module (SM) and the Payload (PL) are simplified by the mission plan. While the SM initially orients the payload in the proper direction, the payload will provide attitude and translation control (6 DOF) for the precision drag-free environment required for very accurate Equivalence measurements. During this science measurement period, the SM provides telemetry and stored commands and power with attitude control inhibited.

Because of the relatively short mission duration, common personnel will be used for both the system test phase and the mission operations phase. This is a significant risk reduction because it accomplishes two major items that plague many other missions. First there is no retraining an operations crew with new procedures and new software. Second, because of the strong "test it like you fly it" philosophy, mission phases are checked with mission software in the test phase to ensure proper operation on orbit. Currently under development is a detailed hardware / software simulator to be used for design verification and pre-flight simulations.

The post-launch mission is divided into five phases. A commissioning phase will begin once the satellite has separated from the launch vehicle, followed by calibration, science, post-science, and terminal phases.

The science phase duration allows a sequence of 20 separate measurements to be conducted with varied experiment parameters. After examining preliminary results of initial pre-programmed measurements, subsequent measurement configurations will be selected from a list of pre-defined procedures. These procedures allow identification, and in some cases calibration, of many disturbance categories. Measurement configurations for a 5-day science measurement period will be proposed concurrently by scientists reviewing the data with a decision from the PI in event of conflict. Two days are allocated for the set-up sequence for each test condition planned to start on a Wednesday.

STEP will be launched into a 550 km sun-synchronous circular orbit (inclination of 97.6°) with an eccentricity of less than 2%. The satellite requires an eclipse-free orbit to meet its thermal stability requirements only during the science phase of the mission. Therefore, launch windows are restricted to periods around the equinoxes that, for the select-

ed orbit height, give an approximately 8-month long mission for the science phase. A schedule slip of the planned launch date beyond ~three months could result in an additional three month launch delay. The selected orbit height is a trade between disturbances from proton radiation and disturbances from air drag. Orbits higher than 650 km would encounter a particle flux that complicates charge management. At orbits below 400 km, drag could be sufficiently large to complicate attitude and translation management. The eccentricity requirement will keep gravity gradient disturbances small.

E 1.2 Spacecraft – Service Module (SM)

A Service Module, which provides standard power, communications, command sequencing and safe modes will be built from off-the-shelf components that meet the STEP requirements. Characteristics of the proposed SM design to accommodate the STEP configuration are as follows: (1) no moving parts or matter in science measurement mode, (2) avionics adapted for STEP using magnetic actuators only in Science mode, (3) thermal design using passive control methods only (no fluid movement), (4) accommodation of Payload electronics with minimum variation in temperature during the extended non-eclipse season and (5) a stiff fixed solar array structure mounted to an octagon and struts structure with no frequency coupling into the experiment that impacts science data.

Structural/Mechanical – The SM structural elements, octagonal walls, payload pallet, and struts, will be made from CFRP in order to minimize the thermal and mechanical distortions that could affect the Equivalence Principle measurement. The fundamental frequencies are 46 Hz axial and 26 Hz lateral. At the same time the design provides radial compliance to minimize stresses due to thermal gradients between the Dewar and the SM. A structure test model of the octagon and floor has completed qualification testing to levels well beyond those needed for STEP. This design will provide the optimum combination of design simplicity, proven manufacturing and assembly, stiffness and strength performance, and cost. A mass list of the STEP Spacecraft can be seen in Table EF-8.

Power – The power subsystem will control the bus voltage with solid-state power controllers that switch the solar array strings. This approach can provide well-regulated bus voltage to the payload since there will be no eclipses during the mission.

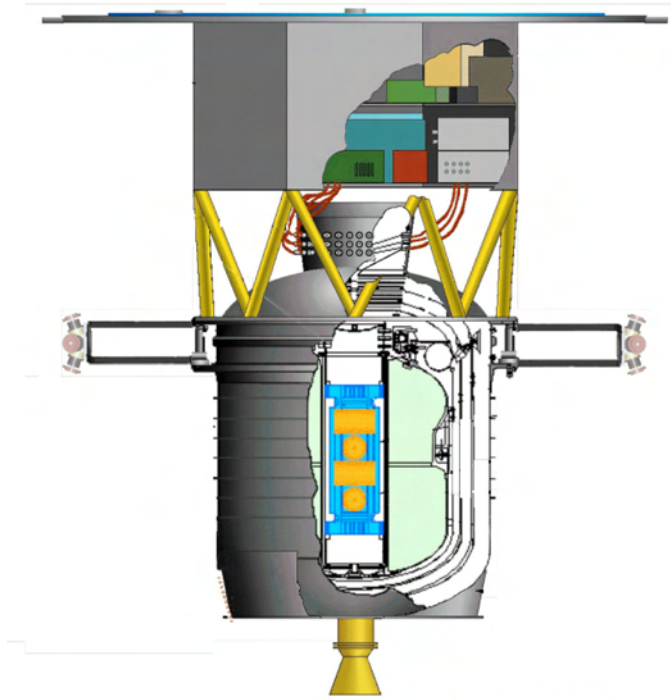

Figure E.1.2. Interface with PL is straightforward.

A Gallium Arsenide solar array will provide ample power margin for ASH and Science Mode (Table EF-6). The power budget will be nearly constant throughout the entire mission. This will allow passive thermal control, with heaters used during periods when the payload electronics will be off. The battery will be sized for emergency modes, allowing 9 orbits of SM-only operation. The fixed array / sun shield which is not fully populated was sized to accommodate an off-Sun angle of 20°. Battery management during the science phase of the mission will be unnecessary.

Electronics – The STEP Service Module avionics architecture will be based on the centralized On-Board Management Unit (OBMU) developed and qualified in the framework of the European small satellite programs.

Communications – Complete 4π-steradian communications coverage will be obtained by mounting two antennas at opposite positions on the solar array. This configuration achieves full coverage, and keeps the design modular, without mounting antennas on the Dewar. It also keeps the RF cable runs relatively short and makes the antennas less vulnerable during the integration phase. With a 5W transmitter feeding both antennas simultaneously, a data rate of 1.6 Mbps will be achieved with a downlink margin of at least 9 dB. This configuration will use off-the-shelf redundant transceivers in a single unit for communi-

cations reliability better than 99.8%. Using a ground station at Svalbard, 60 hours of stored data could be downlinked in 8 orbits.

Command and Data handling – The data handling system will provide Service Module command and control, manage the provision of attitude and navigation sensor data to the payload, and store payload data. The Service Module On-Board Management Unit (OBMU) will control all command and data handling and all of the spacecraft system interfaces. A built-in 4.3 Gb solid-state Mass Memory will be used to store collected science data between visibility periods, providing 60 hours of storage at 20 kbps. The link between the SM and the PLM will be via a MIL-STD-1553 bus. The SM computer will serve as the 1553 master throughout all phases of the mission.

Attitude Control – The SM will provide coarse attitude control for acquisition and safe hold, while the Payload will provide fine attitude and drag-free control during science operations.

Following separation from the launch vehicle, the SM Attitude and Orbit Control System (AOCS) will autonomously acquire a nominal Sun-pointed attitude. The acquisition design will re-use the fully validated Acquisition and Safe Hold (ASH) strategy relying on passive magnetic stabilization, known as the "Bdot Law". This simple and robust control scheme commands the three magnetic torquers in proportion to the time derivative of the Earth's field as measured by a fluxgate magnetometer. Many simulations have verified that Sun-pointing is achieved from any attitude and initial tip-off (up to 15°/s). A small reaction wheel will be used to create a bias momentum along the Z-axis and the combination of magnetic control and on-board angular momentum will result in a rapid alignment of the spacecraft Z-axis towards the positive orbit normal, which for the dawn-dusk orbit is nearly Sun-pointed. A by-product of this process will be that the final steady-state rotation rate (around the normal) will be twice the orbit rate, convenient for beginning the science mode. This configuration is also the steady-state safe mode similar to a science-mode pointing with a different rate. During normal operation, the momentum wheel will be spun down against the magnetic torquers and prevented from moving by friction torque. Extensive calculations have shown that this friction torque will be large enough by many orders of magnitude.

Sun sensors are included only for attitude anomaly detection during the science mode. After ASH, the spacecraft will enter the transition mode, in which the SM will continue to control the spacecraft while the PL will perform its drag-free sensor initialization. At the end of this mode, the fine sensors and the payload thrusters will be "on", and fine attitude control will be initiated. In science mode, the PL will perform three-axis attitude and drag-free control using the proportional helium thrusters and the SM magnetic torquers. Information from the Star Sensor will be transmitted periodically to the payload, which will implement the fine attitude control laws.

Thermal Control – The thermal design takes advantage of the benign orbit conditions, using passive thermal control techniques to minimize thermal distortion and heat flow to the Dewar, and to provide stable temperatures for the readout electronics. The slow roll and dawn/dusk orbit produce almost uniform temperature distribution around the spacecraft. Multilayer insulation will surround structures (struts, Dewar shell) to minimize heat load from Albedo and the resulting temperature variations. The solar array will shade the outer shell of the Dewar to minimize its operating temperature. Heat transfer from the Service Module to the Dewar will be minimized by conductive and radiative isolation, so that the Dewar outer shell will be maintained at nominally 220K throughout the mission. The payload electronics units will not be directly mounted to the radiating surface of the octagon, minimizing their orbital temperature variation.

E 1.3 Instrument Accommodation

The interfaces between the PL and SM are relatively simple. The SM provides power, communications, data and command handling, coarse attitude control and safe modes, and a stable structure thermally isolated from the Dewar for mounting electronics boxes.

The Service Module is configured to meet all of the mechanical accommodation of the system while still providing a clean interface between the SM and PL. The spacecraft components will be stacked to place all of the SM subsystems, with the exception of the star tracker, atop the Dewar. The star tracker will be mounted on a bracket at the base of the Dewar providing it with a clear field-of-view. The truss framework thermally isolates the payload from the SM. The truss structure minimizes distortion from thermal differences between the Dewar and the oc-

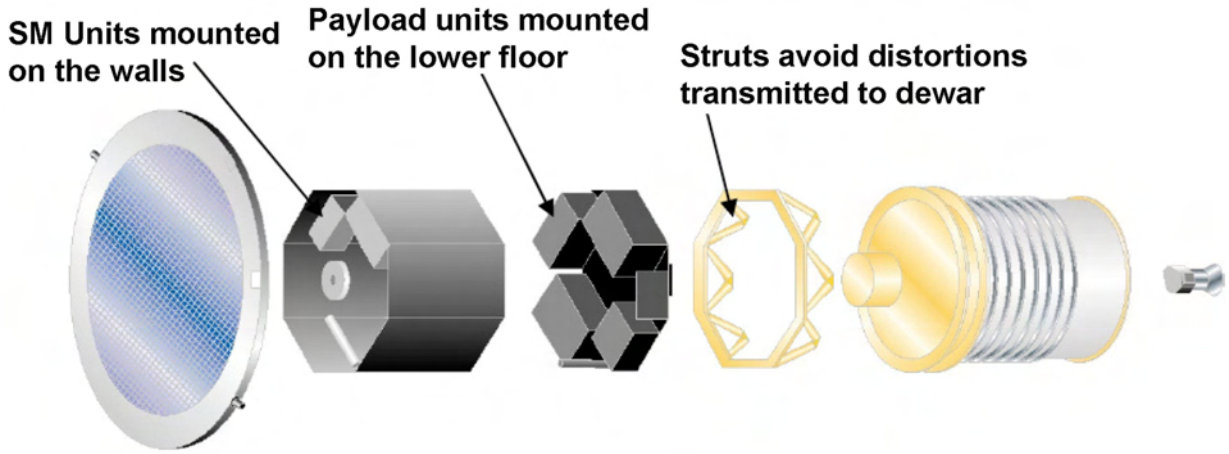

Figure E.1.3. The simple mechanical STEP concept separates payload and service functions

tagon, and is also sufficiently stiff to meet launch loads. Proportional thrusters will be mounted on booms from the Dewar, reducing plume impingement on the system.

The payload electronics boxes will be mounted inside the SM octagon. To simplify this interface they will be mounted to the floor of the octagon while the Service Module boxes will be mounted to the walls. The octagon floor, or payload pallet, with struts attached, will be delivered to Stanford early for payload integration and testing. When the Service Module arrives, the entire system will be stacked to form the spacecraft.

Power – The electrical interfaces have been kept straightforward and simple to avoid reconfiguration of the heritage hardware designs. The Service Module will provide 28V switched power to all of the payload electronics boxes (ACE, SRE/Payload Processor, and EPS). The spacecraft is powered on in a controlled manner after the Sun has been acquired. This configuration allows the Service Module to shed loads in the event of a power problem. All power conditioning will be provided by individual payload electronics boxes.

Communications – Science and engineering data will be processed in the PL Processor at a 10 Hz rate and passed in packetized form to the Service Module for storage in the mass memory. Timing synchronization across the bus will allow the computers to communicate without loss of data. The PL Processor will perform all editing and masking of the payload data. Data packets will be sent across the 1553 interface and merged with the SM data packets by the OBMU for storage into the mass memory. Upon request from the ground, the stored data will be transmitted. Real-time data will also be available.

Table E.1.3-1. All major interface trades are complete. Second-tier trades completed in Phase B.

Item	Issues	Outcome (in STEP)
Structure and configuration	Integration sequence / Struts, lattice, or upright interface / structure design to minimize thermal distortion	Separable payload panel ("floor") enabling parallel I&T of PL and SM. Struts between SM and Dewar. All carbon fiber construction.
Attitude control	Acquisition/safe mode – with or without wheel, Transition mode	Use of wheel in ASH mode only. Transition mode under SM control.
Data handling, software, autonomy	Sharing between PL and SM computer, Hierarchical or decentralized failure detection isolation and recovery, Provision of commands to payload from SVM	SVM controls magnetorquers, PL controls thrusters. SM controls ASH mode, PL controls science mode. Hierarchical SM failure detection isolation and recovery. Provision of commands to payload from SVM via 1553 bus.
Power	Regulation architecture, Battery (NiCd, Solar cells (Si or GaAs)	Battery regulated – no eclipses in normal mode, NiCd baseline, GaAs Solar Cells
Communication	Antenna configuration	Antennas mounted to solar array.
Thermal	Entirely passive or passive with heaters, equipment thermal coupling, interface to Probe/Dewar	Entirely passive in science mode. Payload equipment radiatively coupled to radiators. Conductive and radiative isolation.

During the 5-day science measurement period, the Science Payload (PL) will maintain the precision attitude control required using the science instruments as sensors and the Helium vent gas as the actuator. The important Service Module to Payload interface has been engineered and planned to minimize risks. A SM CPU with data bus interface will be delivered early to include in our existing hardware simulator to support data flow development.

The payload flight equipment shelf will delivered separately to Stanford for electronic equipment mounting and payload integration testing. When the Service Module is delivered to Stanford, integration is predominantly a power connection, a 1553 connection and the shelf and strut connections of the structure. Because of the relatively short STEP 8-month orbit operations, the test team is also the launch team and operations team thus minimizing transition issues to a different teams associated with most other missions.

E 1.4 Payload

The science payload consists of the cryogenics hardware, payload electronics and the drag-free actuators.

Science Instrument – The STEP DACs have a long development history and the design has undergone many cycles of development. The test-mass material and shape are the result of significant analysis and test within the Stanford and European STEP community. We have designed a prototype model to the flight unit for our test system—the accelerometer test facility (ATF). The prototype model can be tested on the ground under conditions as similar as possible to those it will experience in orbit. Each accelerometer has redundant measurement capabilities: an ultra-sensitive SQUID system capable of EP tests of 10^{-18} and a less sensitive electrostatic system with measurements at 10^{-16}.

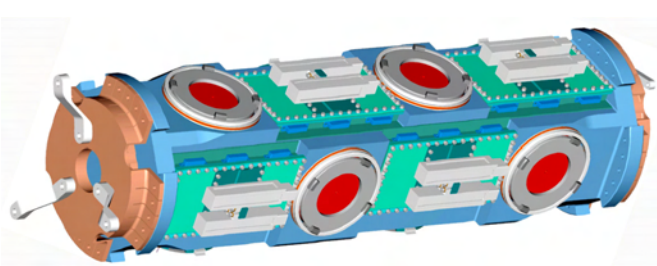

Figure E.1-4. The SIA is a 3-D model checked for fitting and interference.

Science Instrument Assembly (SIA) – Four DACs are integrated into a quartz block along with the supporting cryogenic electronics. The design has been completed and the design model verified for assembly conflicts for all items in the SIA. The redundancy inherent in the SIA with the four differential accelerometers provides high confidence a random problem will not harm the mission and reduces the level of uncertainty in the science measurement.

Probe – The probe is designed and built by the Lockheed Martin Company. LM utilizes a strong history in this area and preliminary designs have been reviewed. Signals have been identified and a cable count has been accomplished. The cryogenic interface between the metal probe and the quartz SIA is flight proven from the GP-B program.

Dewar – The helium dewar hosts the probe and SIA in a cryogenically cooled vacuum stable thermal environment. Temperature control is maintained by the back pressure of the thrusters as was done on GP-B. The dewar was prototyped on a LM internal development program. We have examined using this prototype as our flight dewar, but the quality was not performed considering flight standards. The LM prototype Dewar demonstrated that the STEP lifetime requirements are met. The most significant modification to the prototype will be the addition of silica aerogel. MSFC has demonstrated the required aerogel manufacturing capability, producing sub-scale blocks of aerogel.

Flight Electronics – The STEP payload electronics have design heritage from GP-B. Design changes will be breadboarded and tested at Stanford. Flight board layouts will be accomplished at Stanford or an experienced vendor here in Silicon Valley with special attention to board support needed to meet the flight environment. Stanford will procure kitting and board manufacturing from a qualified Silicon Valley house. Assembly and test of the electronic components will be accomplished at Stanford. Appropriate conformal coating may be contracted locally or accomplished in house. This approach was used successfully at Stanford on GP-B.

Each DAC has 6 DOF control with the electrostatic positioning system (EPS). Each DAC has a dedicated DSP to perform this function. Along the sensitive measurement axis, the SQUID readout electronics (SRE) will be accomplished using a general-purpose processor for all four DACs. There will be a redundant card for these electronics. The SRE will

Spacecraft disturbances		
Aerodynamic Drag	$4.5 \times 10^{-5} \pm 10\%$	9×10^{-6}
Magnetic	Negligible	3.2×10^{-4}
Gravity Gradient	5×10^{-4}	1.8×10^{-4}
Radiation Pressure	3.3×10^{-5}	9.3×10^{-6}

Table E.1.4-1. Precision 6 DOF control is achieved by low disturbances, DAC sensors that can detect those disturbances and actuators that have a comparable proportionality.

also perform the drag-free computations on a 10 Hz cycle. Inputs will be received from the DAC DSPs and SQUIDs at the start of the cycle and thruster commands will be issued at the end of the cycle using the 1553 data bus.

The Experiment Control Unit houses the conditioning electronics for the dewar instrumentation, charge management and caging operation.

The attitude control electronics (ACE) will accept the commands at a 10 Hz rate and control the thruster position accordingly. A thruster pressure feedback loop is used for positioning control at faster than a 10 Hz rate. This configuration was flight proven on GP-B.

Drag-free actuators – The flight thrusters are nearly identical to the GP-B flight thrusters. The helium flow rate from the STEP dewar is significantly reduced from the GP-B flow rate. As a result, the throat size must be reduced but the remaining configuration is identical to the GP-B thrusters.

E 1.5 Development Strategy

The STEP schedule decouples the development of the Payload and Service Modules. The Service Module will be built and tested at the provider's facility in Europe while the Payload Module will undergo its development, integration and test at Stanford. Subsystem hardware component interfaces are minimized where possible. Before integration, 1553 data bus electronics and software will be provided by the SM to the Stanford high- fidelity simulator for interface development and verification prior to PL / SM integration. Hardware modularity incorporates lessons learned from past flight programs at Stanford, Surrey and MSFC. Test procedure generation will be based on the mission timeline and as the test program is completed there is high confidence in a successful mission. Attention to the timeline, reporting, data archiving and retrieval, and problem reporting and resolution will enable a smooth and timely transition into system test, launch operations and the flight phase of the mission.

E 1.6 Redundancy and Reliability

The key element of the science payload is the set of differential accelerometer packages (DAC) which has triple redundancy. While the science would be degraded somewhat by the loss of a DAC, the basic goal of the mission would survive. This is true until all four DACs are lost as discussed in Section D. As the DAC's are redundant, electronics for the DAC's are single thread.

Another critical element is the DFC system. The thrusters used for the drag-free system are also multiply redundant. Any two thrusters can fail closed without degrading the mission. One thruster can fail open without mission impact. The ATC electronics will be redundant along with the payload CPU.

The cryogenic system is vulnerable to single-point failure, but this is a high-reliability system and numerous similar systems have been flown. No previous mission provided cryogenic redundancy and no mission has been lost from the lack of it. Substantial margin exists in the STEP measurement plan to accommodate degraded cryogenic performance.

The service module will have redundant com-munications and selected redundancy on the power subsystem and the attitude control subsystem.

Electronics Minimum Operating Time – A minimum power-on operating time will be established for all electronics as follows: a) unit level, prior to spacecraft integration, each electronic assembly, including each side of a block-redundant element, will have at least 200 hours operating time and, b) system level, prior to launch, each single-string electronic assembly will have 1000 hours operating time and each side of a block-redundant element shall have at least 500 hours operating time with a goal of 1000 hours.

Parts Program – Parts are burned in at least 160 hours. "Level 2 plus" parts or better will be utilized. Whenever feasible (cost and schedule considerations) Class S parts will be used. STEP screening criteria will be used on non-qualified parts with radiation testing performed on part types not char-

acterized. The acceptability of parts used will be evaluated with respect to the following criteria:

- Quality system and assurance level the products are produced under
- Product performance
- Product workmanship assessments
  - Destructive Physical Analysis results
  - Failure histories
  - Reliability trends
  - GIDEP alert histories of the product and manufacturer
  - Qualification and screening test results
- Product availability
- Manufacturer audit and survey results
- Manufacturer delivery histories

E 1.7 Assembly, Integration and Test Flows

The assembly, integration, and test of the Payload, Service Module, and the overall Spacecraft are described below, and an overview of the integration and test flow of the major STEP elements is shown on the I&T Foldout.

The science payload manufacturing approach can be seen in on the manufacturing foldout.

The payload testing strategy will be to test each part at the lowest level to ensure that it meets the science and functional requirements. This testing will be done during the build and qualification processes. The most critical requirement will be on sensor noise (in particular, SQUID noise), which not only will set a limit to performance but will also directly affect the translation control performance and charge control. The SQUID noise will be confirmed to meet requirements by measuring it with the masses caged. This will eliminate sensitivity to the vibration noise, which is the limit to the ground-based experiment. The test masses will be moved slightly by changing pressures in the caging system, in order to test SQUID sensor and EPS functionality. The actual flight bearings will be tested in place for functionality by current trapping techniques previously developed for the ground test bed. The charge measurement and control, EPS, and caging systems will be similarly tested.

Payload Integration and Test – The PL integration and test will be done at Stanford. Heritage from GP-B and other flight programs at Stanford will include key personnel for facility operations, ground support equipment (such as vacuum and gas handling systems), and procedures such as those used to successfully handle and condition a flight Dewar.

Service Module (SM) – The SM is based on the adaptation of a proven commercial satellite platform to provide accommodation, thermal control, power, communications, navigation and safe modes for the spacecraft. The Service Module structure will be customised to the mission, but it will be almost identical to an IRD structure that has completed both static testing and sine testing to loads well in excess of those expected for STEP.

The STEP Service Module Flight Software is based on a modular design and a high level coding language (ADA) and on the HOOD hierarchical oriented methodology. It was designed, developed and validated to allow re-use and simple adaptation to specific missions. The System General Services and Kernel layers, in particular, will be fully repeated and will inherit the validation status.

The software application layer will be more dependent on the mission. The applications dedicated to the bus management (TM, TC, AOCS, Thermal Control & Battery Control) will be adapted simply by tuning pre-identified parameters, the software validation being already achieved within a given range for each parameter. The “Payload management” module will be the only software module to be specifically developed for the STEP mission, and it will interface to the payload computer and its software over the MIL-1553B bus.

Service Module Integration and Test – The Service Module structure will be manufactured, assembled, and then static proof tested. In a parallel operation, the harness will be manufactured and end-to-end and isolation tested. Once these tests have been completed it will be integrated onto the SM structure. The structure will then be thermally equipped and electrically integrated.

The electrical equipment will be procured as fully flight-tested units at equipment level. These flight units will then be integrated onto the Avionics Test Bench. Here all command and telemetry functions will be exercised and the flight software and operating modes will be verified. Payload interfaces will be verified using the payload simulator, including the storage of the payload computer operating software. The Avionics units will then be removed from

the test bench and integrated, mechanically and electrically, onto the SM structure. Once the electrical integration is complete, a full baseline electrical performance test will be performed.

The Software Validation Facilities (SVF) will be designed to allow flight software validation on the true target computer. It will be tightly coupled with the Software Development Environment, which will be able to run on its workstation, and it will also be fully compatible with the Avionics Validation Bench, which includes more avionics units.

The SVF will allow the software to be tested in various conditions, starting with static simulation of the missing avionics for the integration test all the way up to a representative dynamics simulation of the AOCS avionics and spacecraft dynamics for closed loop tests.

The Avionics Validation Bench (AVB) will be designed to perform avionics incremental integration and validation, starting even before flight software is available. Since its core will be a full SVF configuration, it will be totally compatible with it, allowing software specialists to use it for debugging.

The AVB will be an extension of the SVF, designed to accommodate more and more avionics starting from the minimal SVF configuration. The AVB will be delivered to Stanford for spacecraft tests.

Spacecraft – Prior to the commencement of ATLO the PL will be present at the Stanford Payload Integration and Test Facility awaiting arrival of the SM. Each module will have completed its respective subsystem testing and will be ready for System-level integration. The SM, along with its GSE will be delivered to the Stanford Payload Integration and Test Facility.

A one-time mechanical mate of the spacecraft components, the PL and SM, will be accomplished by crane. Using breakout boxes and electrical test equipment, a methodical procedure that verifies each end circuit before electrically connecting the corresponding circuits will be accomplished. Following the completion of this electrical integration, the spacecraft will function as a system, sharing power and command & telemetry resources.

Once integrated, functional tests of the two major modules will be completed. These tests will verify that the modules function in the same manner as they did prior to integration. Previous subsystem baseline testing will provide the benchmarks/predicts for these tests.

Next, the remaining subsystems/sensors will be integrated. The same integration flow will be followed: mechanical and electrical circuit integration, followed by a subsystem functional checkout.

Spacecraft Test I – The fully integrated spacecraft will undergo the first of two System Functional Testing campaigns. System functions involving the coordinated operation of multiple subsystems will be evaluated, including data bus switching, fault protection, under-voltage response, etc. Additionally, the Spacecraft Functional Baseline will be executed for the first of several times. This procedure tests the spacecraft's functionality as a system and establishes a baseline against which follow-on tests will be evaluated. All system interfaces will be verified, and all major system functions will be executed. This test will be modularized so that sections can be omitted if required to accommodate special needs and/or schedule requirements.

Additional activities during this phase of ATLO will include External Compatibility Testing of the Ground Data and Mission Systems, along with Ground Station Compatibility. Spacecraft phasing tests, pyro checkout/installation and sensor alignment will also be accomplished.

Spacecraft Environmental Testing – Availability and location of facilities, test requirements, cost, and experience were all analyzed and it was determined that MSFC was the best fit for STEP's needs. The spacecraft and its support equipment will be shipped to MSFC for system-level environmental testing. To minimize spacecraft moves, all activities to complete spacecraft environmental testing, system-level testing and final closeouts in preparation for shipment to the launch site will be completed at the Environment Test Lab.

A full suite of dynamic tests will be completed which will include modal, acoustic and pyro shock. The launch and flight environments will have been analyzed and the appropriate test levels established for each of these tests with margins identified. During this period there will also be an opportunity for a launch adapter fit check and functional checkout. Abbreviated Spacecraft Baseline testing will be interspersed throughout this test phase to validate proper spacecraft operation following each of these tests.

The spacecraft will be relocated and made ready for system-level thermal testing. During thermal vacuum testing the spacecraft will be operated in a flight-like manner while the system's thermal response is tested and monitored. The primary objectives of this test will be to verify the spacecraft's thermal model and to establish or validate operating scenarios dictated by the spacecraft's thermal response under varying operating modes. Secondarily, the system thermal test environment will provide the opportunity for system-level testing to be accomplished which can only be performed under vacuum conditions.

Spacecraft Test II – Upon completion of the thermal test, the final phase of spacecraft system testing will be completed. Activities such as EMI/EMC, spacecraft self-compatibility, system endurance and plugs-out testing are planned for this phase. Since it is envisioned that the STEP launch campaign will be condensed, it is planned to complete all possible activities prior to launch-site shipment to enable a very streamlined flow at the launch location; the goal is to achieve as close to a "ship & shoot" configuration as is possible.

E 1.8 Systems Engineering

Systems Engineering for STEP will be conducted by Teledyne Brown Engineering (TBE) with significant input from the Stanford systems engineering team member. The major systems engineering activities in Phases A and B are to refine the requirements definition and update the trade studies already completed. In phases C/D, systems engineering will focus on interface control and documentation and test plan generation and test verification of the requirements.

Trade Studies – Over the last 10 years, the STEP

Table E.1-8. Mission trades have been performed several times, resulting in a stable, lowest cost payload design which meets requirements. Level 1 requirements are under configuration control.

Selected previous trade studies for STEP			
Item	**Studied in**	**Issues traded**	**Outcome (in STEP)**
Orbit type	M2	Equatorial / sun synchronous	Sun synchronous
Orbit height	M2&3, QuickSTEP, MiniSTEP, STEP	Drag / radiation / launcher capacity /cost / performance / height	550 km
DA "gap"	M2, STEP	Patch effect / gravity coupling	100 micron for MBS
Launch Vehicle	M2&3,QuickSTEP, MiniSTEP, STEP	Mass margin / cost / requirements / orbit / reliability	
Test Mass Shape	M2&3, QuickSTEP, STEP	Cylinder/ belted cylinder / sphere / symmetry / rotation control / 4th &6th moment match, chamfers /rounded edges	Belted cylinders with chamfers
Test Mass Materials	M2&3, QuickSTEP, MiniSTEP, STEP	Coverage / cyclic condition / pivot scheme / cost / scientific certainty	3
Number of masses	M2&3, QuickSTEP, MiniSTEP, STEP	EP / co-experiments / cost / performance / configuration	8
Caging Mechanism	M2, MiniSTEP, STEP	PZT / motor / hydraulic piston / bellows / bourdon tube	Bellows
Discharge Scheme	M2&3, QuickSTEP	Radioactive / UV	UV
		continuous / intermittent	intermittent
		proportional / feedforward	feedforward
Tide Control	M2&3, QuickSTEP, STEP	Surface tension / electrostriction / foam normal / supercritical fluid	aerogel
		surface tension /electrostriciton	
		aerogel / foam / other	
Service Module	M2&3, QuickSTEP, STEP	Division of function with payload, interface requirements, power, mass, telemetry, processing, commissioning, initialization	DFC is payload function; see applicable tables in this study

team has executed a number of trade studies to achieve the maturity of design that exists today. These trade studies are listed in Table E.1-8. Many trades have been performed to create a SM that is low in cost, reliable, and meets the requirements of the science mission.

Traceability Matrix – Tables EF-1 through EF-5 represent the STEP traceability matrix. In order to meet the science objective of testing the Equivalence Principle to the 10^{-18} level, requirements have been flowed down through the system. The ability to meet each of these requirements has been analyzed. STEP meets each requirement with margin.

E 1.9 Product Assurance

The STEP Project will implement a comprehensive Safety and Mission (Product) Assurance (SMA) Program substantially responsive to the NIAT recommendations and guidelines. Enhanced peer reviews and heritage reviews, a disciplined Risk Management program instituted from the inception of the Project, a robust test program coupled with the closed-loop failure reporting system will ensure renewed emphasis on assurance activities. An integrated partner team consisting of MSFC, Stanford University and the Rutherford Appleton Laboratory for the SM, and early involvement of quality, safety and reliability disciplines are central to the success of this implementation. The STEP SMA program will emphasize the use of quality parts and materials, and high standards of workmanship in combination with proven, in-place ISO 9001-compliant processes and procedures at the team members' sites and at their subcontractors and vendors.

The approach to be utilized includes extensive partnering among the Mission Assurance team resulting in a Mission Assurance IPT. A Stanford University Mission Assurance Manager will have overall leadership of the IPT and overall responsibility for the Safety and Mission Assurance (SMA) Program. Support will be available from Stanford assurance disciplines via a Stanford Mission Assurance lead that will report to the Stanford University Mission Assurance Manager, throughout the project lifecycle to the end of the mission. Project Mission Assurance and Safety Plans will be developed early in the Formulation Phase to ensure that SMA is an integral part of project planning, as well as, implementation. Existing SMA processes at the team sites will be reviewed for acceptability in joint reviews between Stanford and the team.

STEP will establish, implement, and maintain a safety and mission assurance (SMA) program for hardware and software development, which is compliant with NPG 7120.5A, ISO 9001 requirements. STEP will generate System Safety and Mission Assurance Plans. The plans will include: system safety hazard identification and mitigation, reliability engineering (reliability analyses including worse case, fault tree, failure modes and effects criticality, and parts stress analyses as appropriate for electronic and mechanical parts reliability engineering, hardware and software quality assurance couple with a tailored IV&V.

STEP has developed a Draft Risk Management (RM) Plan, which will be utilized throughout the project lifecycle. The risk management program will include reference to applicable lessons learned from failure reports and the NASA Lessons Learned Information System (LLIS).

STEP Hardware QA (HWQA) implementation includes extensive heritage reviews for inherited hardware and designs. Participation in the review of vendor quality plans, surveys, environmental tests and inspections are integral to the strong commitment to hardware quality for STEP. Stanford University along with Stanford and other SMA team members' QA will verify that adequate and appropriate build and test processes and procedures are utilized on STEP.

STEP will develop a comprehensive Review Plan that will include a PDR/CDR, Pre-environmental Test Review, Pre-ship Review, Launch Readiness and Red Team Reviews in accordance with NASA requirements. Peer reviews will also be used extensively. The reviews process will be used throughout the STEP lifecycle. The independent Red Team Reviews will be supported as required.

E.2 Launch Vehicle

Three launch vehicles were considered in preparation for this AO proposal which meet the launch requirements. (1) The Rokot which would be under German sponsorship which meets all of our requirements with 30% weight margins. The Rokot has generally had a successful history. It was not baselined because the German sponsorship would place the Rokot outside of the AO cost caps. (2) The Space X Falcon 9 exceeds our requirements but SMEX does not support this launch option. (3) The Indian PSLV is our baselined launch vehicle. It

has had a string of successes. Discussions with the ISRO indicate that it will fit within the contributed cost cap and be available for launching 1,000-1,200 kg class of satellites into polar sun-synchronous orbit with a fairing size more than adequate . Discussions with NASA will occur on additional launch vehicle trades during the Phase A study.

Launch Site Operations – Transportation will be by air shipment to Satish Dhawan Space Centre in Sriharikota via project-provided air transport. The spacecraft's handling fixture/shipping container, along with its support equipment, will be designed to endure these varying transportation environments.

Activities at the launch site will include a final spacecraft functional checkout and pre-launch closeout activities. Finally, a 2-week cryogenic activity will be completed just prior to handoff of the spacecraft to launch-service provider. There is a unique requirement of the STEP mission to service the dewar guard tank every five days after the fairing is installed. This was accomplished with no issue on the GP-B program. It will however require access in the fairing to accomplish the servicing.

As required the STEP ATLO test team will participate in spacecraft/launch vehicle integration. Likewise participation in launch rehearsals and contingency operations will be accomplished. Finally, launch readiness will be assessed and appropriate project/institutional management will be apprised of the spacecraft's launch-ready condition.

Once the spacecraft is launched, communications will be maintained between launch-site operations and STEP Mission Operations at Stanford to effect a smooth transition from launch-site to mission operations command & control.

Table E.3. The mission has been planned by a team experienced from the GP-B program

Operational Phases Duration	Activities
Integration and Test Phase	Events required for mission preparation and verification:
L-12 to L-2 Months Pre-launch Phase L-2 Months to Launch	– Spacecraft integration and functional test (test it like you fly it). – Compatibility testing, network and mission testing, simulations. – On-pad spacecraft/launch vehicle dewar guard tank operations. – Countdown simulation and launch preparation.
Launch Phase	Events from liftoff through spacecraft separation:
Launch to L+2 Hours (pass/orbit for 6 hours)	– Incorporate necessary launch events into SSMOC operations. – Orbit insertion and verification of the reported orbit parameters. – Spacecraft separation and attitude stabilization.
Initialization Phase	Events after spacecraft separation through science mission start:
L+2 Hours to L+30 Days (6 passes/day for 1st week) (4 passes/day for 3 weeks) [plus 2 weeks contingency]	– Sun capture to assure power positive operation. – SM subsystems check-out and commencing orbital operations. – SP turn-on, software start and telemetry and operation verification. – Differential Accelerometer uncage, initialization and calibration. – Commence drag free operations with SP control and SM safing. – Calibrate thrusters, other subsystems and components as required.
Science Phase	Events during the typical Science Mission measurement:
L+30 Days to L+5 Months 1 week per measurement (4 passes per 1st day) (2 passes/day for 6 days) [plus 4 weeks contingency]	– Set-up rotation rate and load experiment case operation table. – Collect drag free, differential accelerometer and electrostatic data. – Cryogenic and measurement verification of any non-null result. – Monitor spacecraft subsystems health and status. – Pass Level 2 data to European and U.S. Science Centers.
Post-Science Phase	Events for calibration, accuracy verification and changing conditions
Starts Mission End –30 D (4 passes per day)	– Increase dewar temperature for pressure maintenance. – Equivalence Principle violation confirmation rerunning tests.

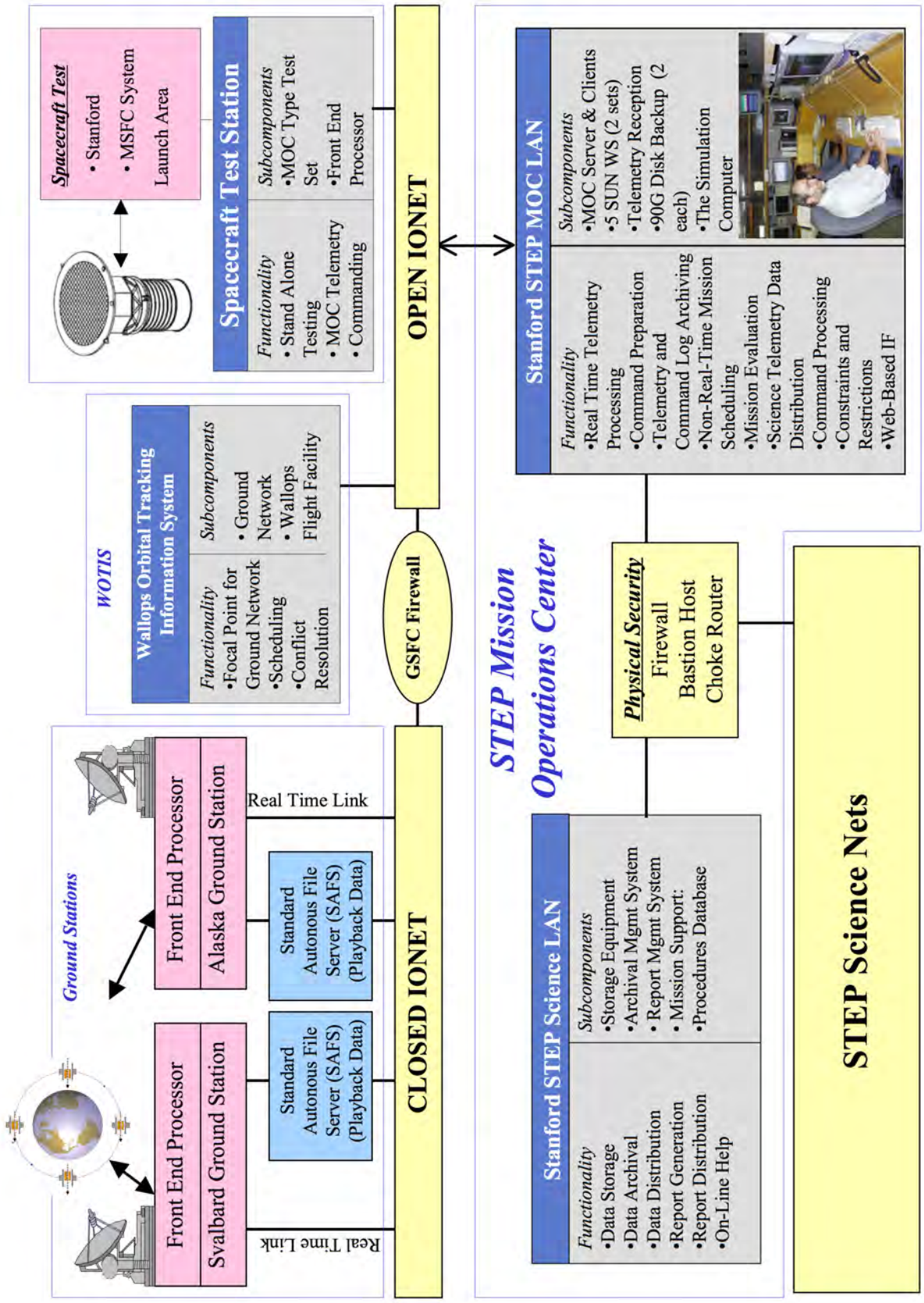

Figure E.3. The STEP ground system uses the same approach for test and flight. This approach has been verified with flight experience.

E.3 Ground Systems

STEP will make use of the Earth Orbiting System Polar Ground Network (EPGN) with Svalbard, Norway and Poker Flat, Alaska as its primary ground stations. These stations offer the opportunity for at least one pass per orbit. The nominal STEP operation during the science mission will plan two passes a day allowing the remainder of the passes to be used as margin. Uplink and downlink will occur on each pass. The solid-state recorder has been sized to store 60 hours of data in the event that a pass is missed so the data can be re-downloaded on the next pass.

The STEP Ground Station, previously used for GP-B operations, will be available for use as the SUMOC. The operational configuration used in the SUMOC for the STEP mission is shown in Figure E.3. Typical functions performed are as follows:

- real-time telemetry processing,
- command preparation,
- telemetry and command log archiving,
- non-real-time mission scheduling
- mission evaluation
- science telemetry data distribution
- command processing (Commands are table-driven with some of the sequences [experiment set-up] programmed as on-board algorithms with the parameters generated and loaded from the ground.)

Much of the STEP command and telemetry database will be inherited from past programs. Heritage hardware designs such as those for the Service Module and the payload electronics boxes have known commands, telemetry needs, and testing requirements. To combine this data into one location STEP will make use of OASIS, a commercially available system developed by Colorado University that is already in place at Stanford. An Oasis-compatible, combined database for the Service Module and Payload will be used for all test and on-orbit operations. STEP will practise a “test it like you fly it” philosophy. This single database will therefore ensure that the Service Module and Payload data have common formats and that any differences will be reconciled during the test program.

OASIS test scripts will be delivered with the Service Module to allow complete integrated SM to PL testing and operations. Calibration curves will be integrated so that the ground station can incorporate the inputs with minimal effort into an integrated SM to PL set of testing. Stored program commands (grouped command sequences) will be identified and tested during the ground test sequence.

E. 4 Operations

A core test team will be maintained to preserve program coherence. Key Service Module and Payload test team members, along with support from Mission Operations, will participate in all phases of manufacture, integration and test. System-level integration and functional testing will build upon the experience gained during subsystem test and integration. Likewise, environmental test specialists will augment the core test team to complete system-level dynamic and thermal testing and the program will benefit from this maturing experience. A subset of the System I&T team will travel to the launch site to prepare the spacecraft for launch vehicle integration and participate in launch operations. Finally, members of this experienced test team will ultimately participate in the on-orbit checkout and operations of the spacecraft. This common and continuous experience base will be an important contribution to retaining of the project’s “corporate knowledge” and applying that knowledge throughout the test and operations effort. There are no unique requirements during the mission operations phase.

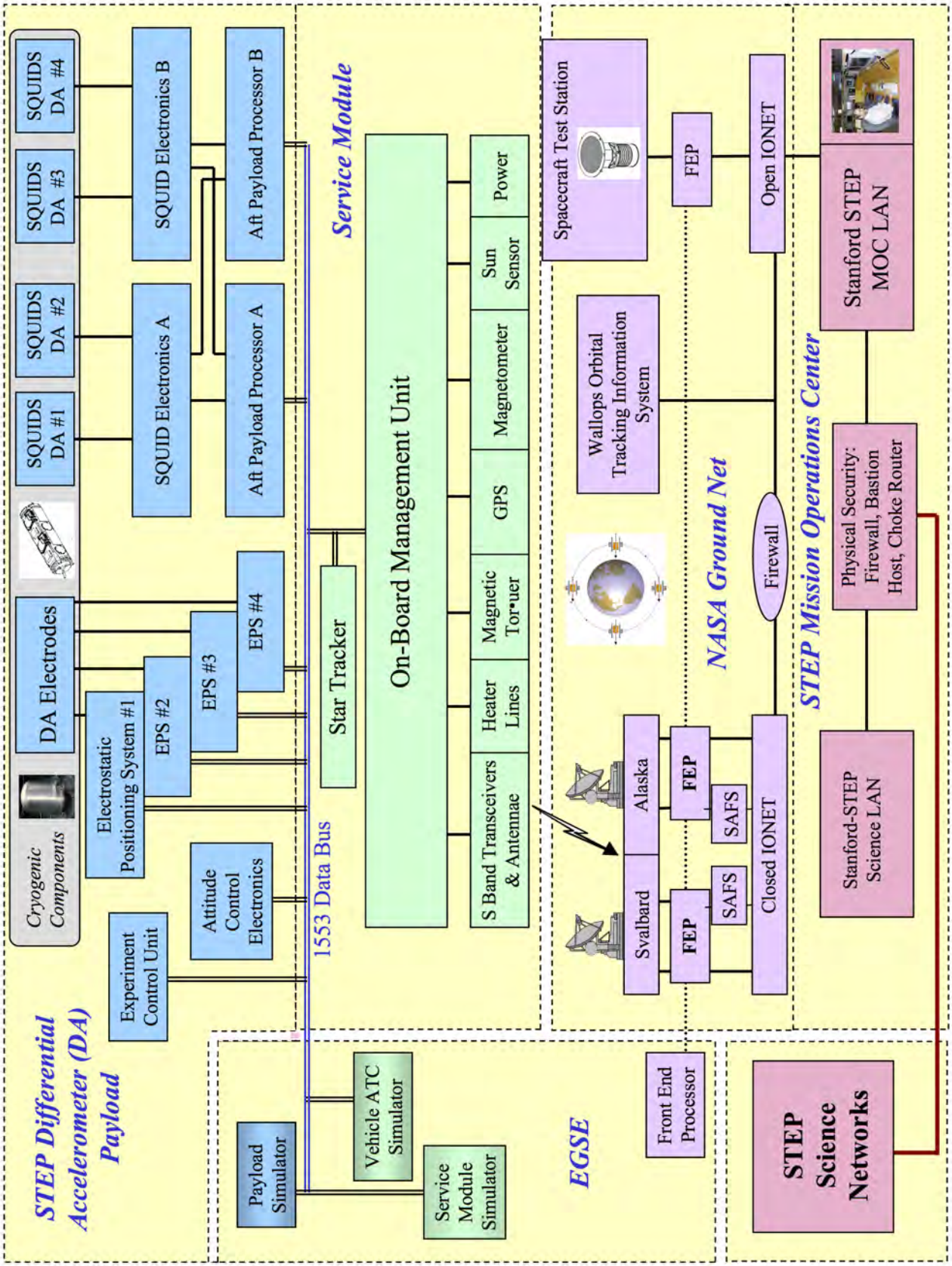

Figure E4. The STEP data flow from the differential accelerometer to the science net.

Tables EF -1 – EF-5: STEP Traceability Matrix. To meet the Science Objective of an EP measurement of 10^{-18}, requirements have been flowed down through the system.

Table EF-1 Science Requirements

Parameter	Requirement	Rationale	Performance
Readout Sensitivity Differential acceleration measurement resolution	< 4.0×10^{-18} ms^{-2} in 8×10^{-6} Hz bandwidth, at signal frequencies from 1.7×10^{-4} to 7.0×10^{-4} Hz	Requirements set for worst case in which errors from readout noise, residual environment (a combination of CMRR and DFC), and differential accelerometer disturbances sum coherently, then the total error will be less than 8.1 $\times10^{-18}$ ms^{-2}; 1 part in 10^{18} of the gravitational acceleration of the earth at orbit altitude. The allocations are made so that half of the total experiment error may arise from readout system noise, and the other half from disturbances.	100% Margin Analysis based on measurement of SQUID system noise and circuit parameters and set up currents from accelerometer design.
Space Vehicle Environment (DFC) Residual common mode accelerations	< 2.0x10-14 ms^{-2} in 8×10^{-6} Hz bandwidth, at signal frequencies from 1.7×10^{-4} to 7.0×10^{-4} Hz.		100% Margin Analysis of Drag Free Control based measurement of thruster noise and SQUID and EPS sensor noise
DA Common Mode Rejection Ratio (CMRR)	CMRR < 10^{-4}		300% Margin Analysis based on accelerometer tolerance stacking, thin film bearing measurements, set-up current balancing, and tests of wire bearing accelerometers.
Differential Accelerometer Disturbances	< 2.0×10^{-18} ms^{-2} in 8×10^{-6} Hz bandwidth, at signal frequencies from 1.7×10^{-4} to 7.0×10^{-4} Hz.		80% Margin Individual and coupled disturbances analyzed in STEP Error Model.

Table EF-2 Instrument Requirements

Parameter	Requirement	Rationale	Performance
Electric Charge Electric charge on any test mass measured and controlled	< $1x10^{-14}$ C variation at signal frequency < $8x10^{-13}$ C dc	Test Mass charge can lead to disturbances due to interaction with capacitance gradients and EPS sensor voltages	50% Margin Analysis based on EPS measurements and tests of UV charge control device
Magnetic Fields Background field Axial gradient Systematic variation	< $1.0x10^{-7}$ Tesla < $5.0x10^{-9}$ Tesla /m < 10^{-18} Tesla variation at signal frequency	High fields and gradients can produce forces on test masses High field variation can couple to SQUID sensor	200% Margin Analysis based on measurement of DC fields in cryoperm shields and AC attenuation measurements in nested superconducting shields
Gas Pressure Residual gas pressure at the accelerometer	< 10^{-11} Pa	Residual gas pressure in combination with temperature gradient leads to radiometer effect disturbance	300% Margin Analysis based on STEP design and residual gas measurements on GP-B Cryogenic Probe
Temperature Systematic variation of DA Temperature Gradient	< 5 mK/m per signal period	Radiometer effect disturbance and interference with sensor systems	>300% Margin Measured and modeled thermal transfer in cryo-test probes and measured thermal conductance of accelerometer materials
Mechanical Stability DA Components and materials dimensional stability	> 1 part in 10^{11} per signal period	Interference with sensor systems and flow down from CMRR requirement	>300% Margin Based on measured thermal expansion of accelerometer materials, assumes temperature and residual acceleration requirements are just met.
Helium Tides Helium position induced gravity gradients	< $7x10^{-14}$ m/s^2/m/signal period	Can produce a gravitation disturbance on test masses	>300% Margin Analysis based on measurements of helium confinement in aerogel

Table EF-3 Mission Requirements

Parameter	Requirement	Rationale	Performance
Mission Lifetime	6 Months	Accommodates full mission timeline	33.3% Margin Dewar Analysis predicts 8-month hold time.
Orbit Inclination Altitude Eccentricity	Sun-synchronous (97°) 400 to 650 km < 2%.	Flow down from thermal, charge control and drag free requirements, > 6 months eclipse free	>100% Margin Analysis based on 30 minute daily launch window and 3 sigma injection error
Mass	819.2 kg	CBE + Contingency includes 648.8 kg for the PLD with harness and launch adapter, 170.3 kg for SVM	95% Margin Based on PSLV launch vehicle capability for 550km high sun synchronous orbit
Power	300.5 W	CBE + Contingency includes 204.7 W for PLD, 95.8 W for SVM, Science Mode	19.8% Margin 360W Based on solar cell efficiency and area

Table EF-4 Service Module Requirements

Parameter	Requirement	Rationale	Performance
Mechanical Stiffness	First resonant mode >10 Hz	Drag Free Control Requirement Flow Down	170% Margin Finite Element Analysis conducted for Astrium Service Module Study.
Vibration	Residual acceleration < $7x10^{-12}$ $ms^{-2}/\sqrt{Hz}$ at signal frequency	Drag Free Control Requirement Flow Down	>300% Margin From structure analysis conducted for Astrium Service Module Study
Sunshade	Shield for up to 16° orbit normal/sun line of sight angle	Shield Dewar from direct sun to reduce thermal distortion, ensure liquid Helium lifetime	7% Margin Design dimensions provide 17° shielding
Thermal	Temperature variation < 18 K at signal frequency	Thermal distortion could couple gravitation disturbances to accelerometer	120% Margin Analysis conducted for Astrium Service Module Study

Table EF-5 Telecom and Ground System Requirements

Parameter	Requirement	Rationale	Performance
Telecom Link S-Band Downlink S-Band Uplink	10.5 dB SNR -146.0 dB Gain at input	Accommodates space, de-pointing, polarization, and antenna losses	9.5 dB Margin 5 W Transponder 35.8 dB Margin 67.0 dBW ground EIRP
Data Downlink	232.5kbps	20 kbps continuous data rate ~8 min ground station coverage per orbit	502% Margin 1.4Mbps downlink rate
Command and Control Hardware	1 Pod of 3 SUN Spark 20 Workstations or Equivalent	1 Workstation for downlink comm, 1 for uplink comm, 1 for Processing and Display	>100% Margin 2 pods of 5 workstations at SUMOC 1 pod of 5 workstations at remote location
Data Latency	2 Hours	Time lag of level 0 data dump to level 1 de-commutation	30 minutes playback, 1 minute real-time Based on GP-B verification tests
IONET Security	Secure Communication and Data transfer	Ensure Command and Control Security	GSFC IONET Firewall SUMOC Firewall and Bastion Host

Table EF-6: Extensive trade studies of the electrical system have created a design offering 19.8% power margin over the Science Mode CBE at End of Life

	ASH Mode			Science Mode		
	CBE (W)	Reserve (%)	CBE + Reserve (W)	CBE (W)	Reserve (%)	CBE + Reserve (W)
PAYLOAD	**0**		**0**	**180**		**204.65**
Dewar	0		0	4.0	30	5.2
ECU	0		0	24.0	25	30
SRE	0		0	93.2	8	100.66
ACE	0		0	24.8	6	26.29
EPS	0		0	34.0	25	42.5
SVM	**104.2**		**108.13**	**92.5**		**95.8**
Magnetometer	1.0	5	1.05	1.0	5	1.05
GPS	0		0.0	9.0	10	9.9
Mom. Wheel	15.0	5	15.75	0.0		0.0
OBMU	31.1	0	31.1	50.3	0	50.3
Magnetorquer	6.0	5	6.3	6.0	5	6.3
Battery	1.0	0	1	1.0	0	1
Pwr Controller	6.4	10	7.04	8.7	10	9.57
S-Band	9.5	5	9.98	9.5	5	9.98
Heaters	34.2	5	35.91	0.0		0.0
Star Tracker	0		0.0	7.0	10	7.7
TOTAL	**104.2**		**108.13**	**272.5**		**300.45**
EOL POWER	**360**					
EOL Power Margin (%)			**232.93**			**19.82**

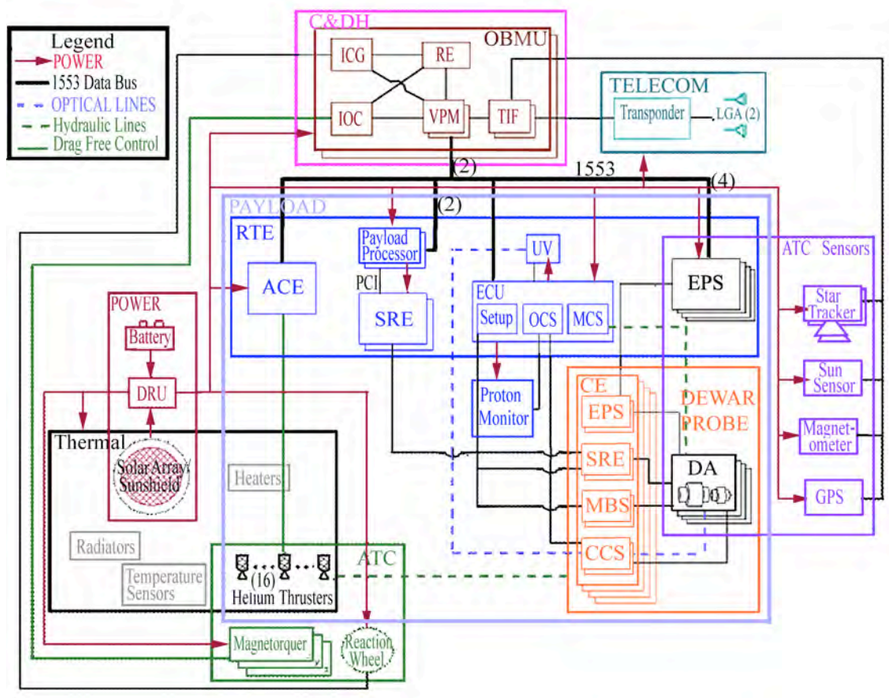

Figure EF-1: The STEP SVM and PLD have been designed as a fully integrated system.

Table EF-7: Performance Summary. Robust Spacecraft performance margins and mature hardware result in low technical risk.

	Requirement	Performance	Margin
Science Data	8 kbps Science 2kbps Housekeeping	Telemetry tables allow up to 50kbps	400%
OBMU CPU Cycles	151 ms	250 ms	40%
PLD Processor Utilization	11.52 mips	24 mips	108%
OBMU Memory	217.3 Kwords	448 Kwords	52%
Data Storage	54 Mbit per orbit 5Mbit software	4 Gbit (60 hours of data at 20 kbps)	
Data Downlink	232.5 kbps	1.4 Mbps	502%
Dewar Life	6 Months	8 Months	33%
Signal Measurement Accuracy	$4x10^{-18}$ m/s^2	$2x10^{-18}$ m/s^2	100%
Thermal Limits	< 0.22 mm deflection	0.1 mm	120%
Vibrational Modes	> 10 Hz	27 Hz Lowest Structural Mode	170%

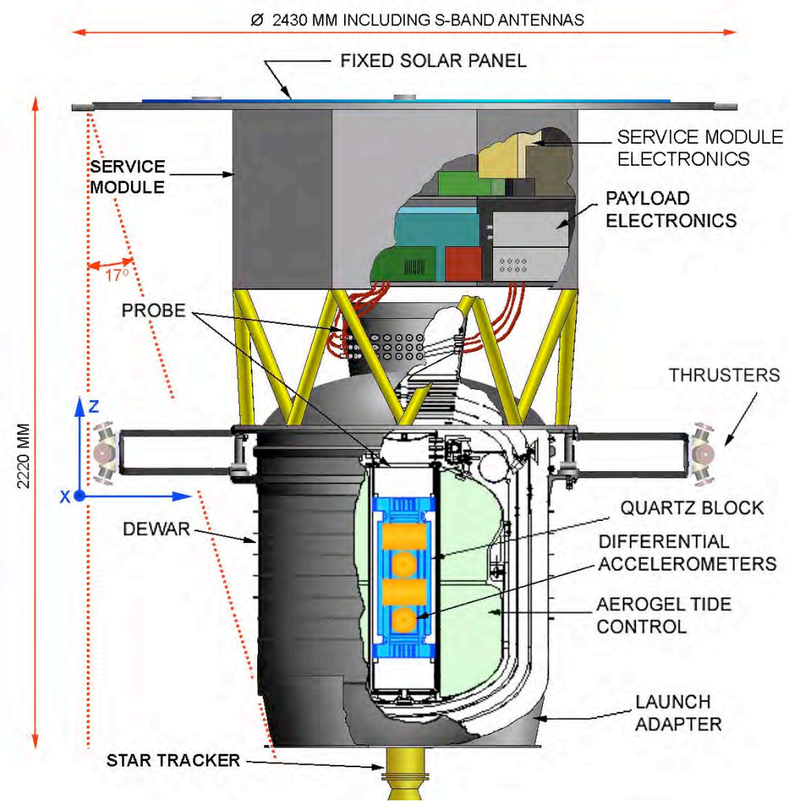

Figure EF-2: Over the last decade the Spacecraft has developed into a simple, compact system that is low cost, highly reliable, and meets all the needs of the six-month mission.

Table EF-8. The PSLV launch vehicle offers a 95% margin in launch capability.

	CBE (kg)	Reserve (%)	CBE + Reserve (kg)	Tech Readiness Level
PAYLOAD	**550.1**		**648.82**	
Differential Accelerometers	21.6	15	24.84	6
Cryogenic Electronics	18.2	30	23.66	7 (SQUID 8)
Quartz Block	28.0	20	33.6	6
Probe	40.2	30	52.26	6
Dewar (incl. Aerogel & He)	269	15	309.35	7 (Aerogel 5)
Cryogenic Cabling	0.5	30	0.65	7 (Cable 8)
ATC Thrusters	14.8	15	17.02	8
Valving Assembly	17.0	30	22.1	6
Proton Monitor	3.4	5	3.57	8
ECU	24.0	30	31.2	6
CCS	2.3	50	3.45	6
SRE	41.0	15	47.15	6 (Boards 8)
ACE	12.1	15	13.92	6 (Boards 8)
EPS	20.0	15	23	8
Harness	20.0	30	26	5
Launch Vehicle Adapter	13.0	15	14.95	5
Thermal	5	15	5.75	8
SVM	**148.1**		**170.33**	
Structure	41.5	15	47.73	6
Thermal	3	15	3.45	8
Solar Cells	2.6	15	2.99	9
Battery	45.0	15	51.75	9
Power Controller	3.0	15	3.45	8
Star Tracker	3.8	15	4.37	7
Magnetometer	0.2	15	0.23	9
Sun Sensor	0.1	15	0.12	9
GPS	1.4	15	1.61	9
Momentum Wheel	4.0	15	4.6	9
Magnetorquers	16.2	15	18.63	9
OBMU	18.1	15	20.82	8
S-Band	4.8	15	5.52	9
Harness	4.4	15	5.06	5
LAUNCH TOTAL	**698.2**		**819.15**	
LAUNCH CAPABILITY	**1360**			
Launch Margin (%)			**95%**	

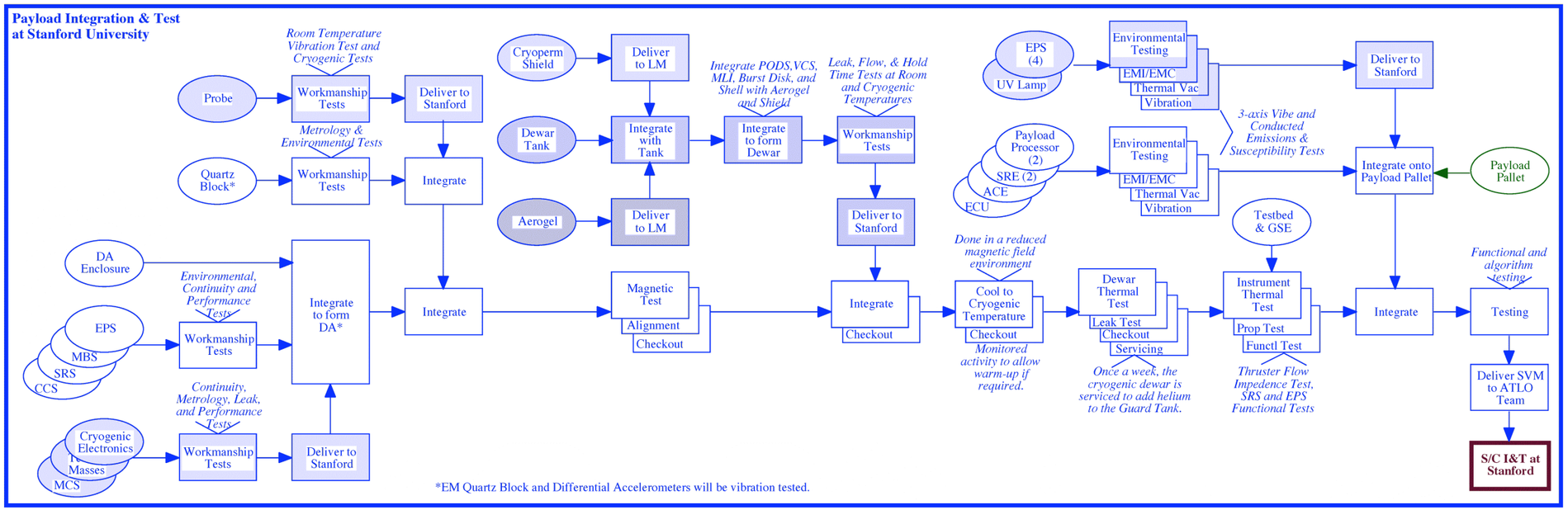

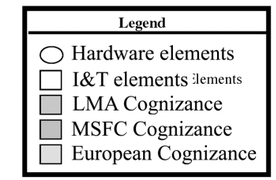

Figure EF-3: This figure depicts an integration and test program which meets the challenges of a complicated payload I&T flow and the involvement of international partners. Enablers such as parallel development, use of simulators and actual flight articles when needed, and the use of established labs and test facilities have contributed to a plan that is both robust and mature.

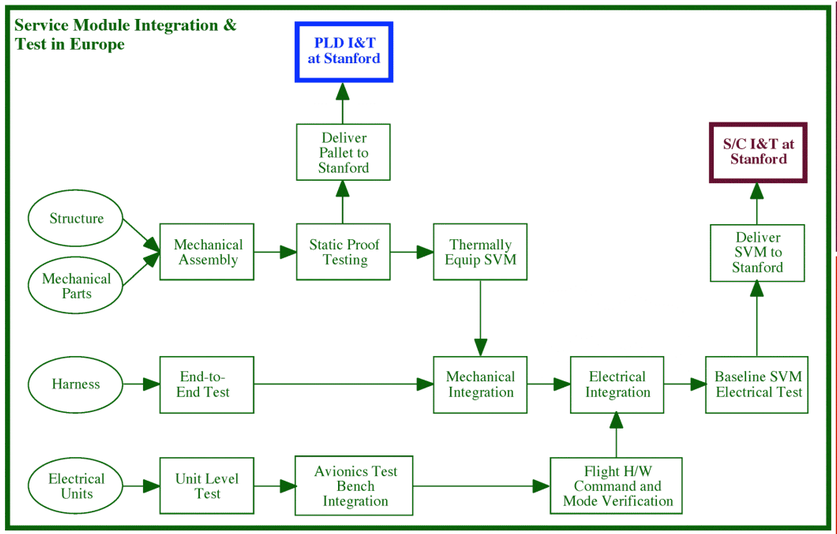

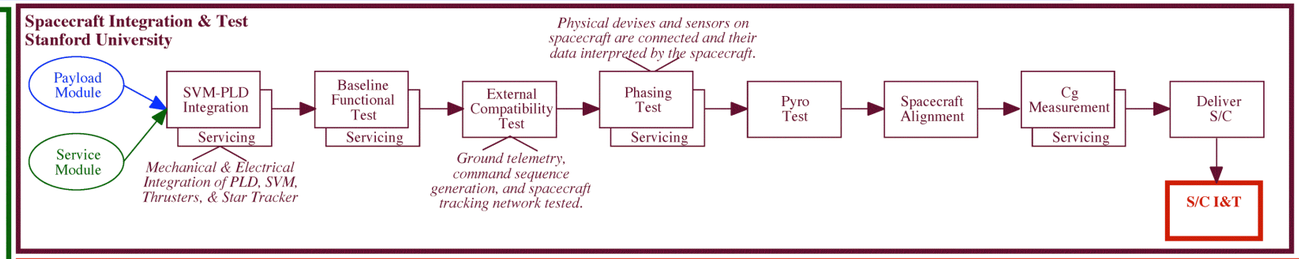

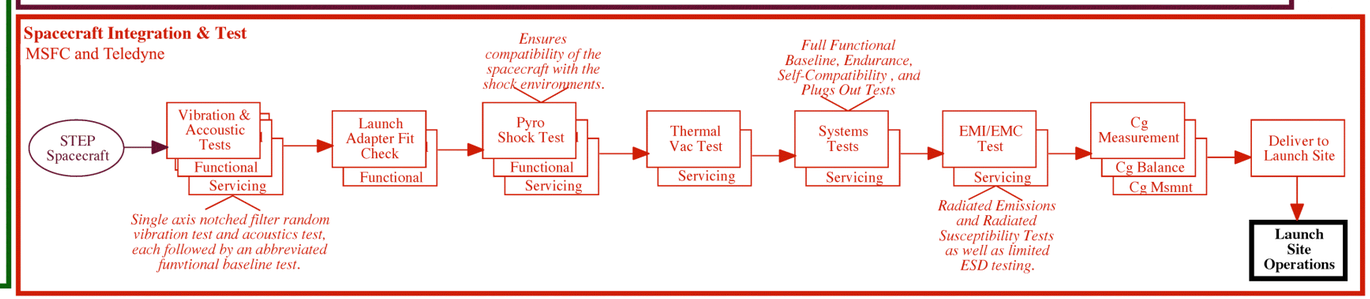

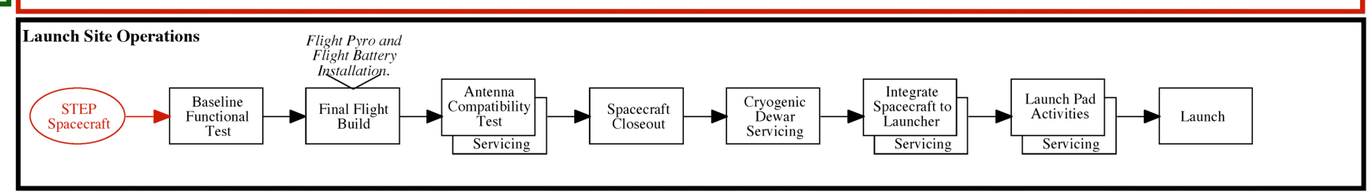

PAYLOAD DESIGN

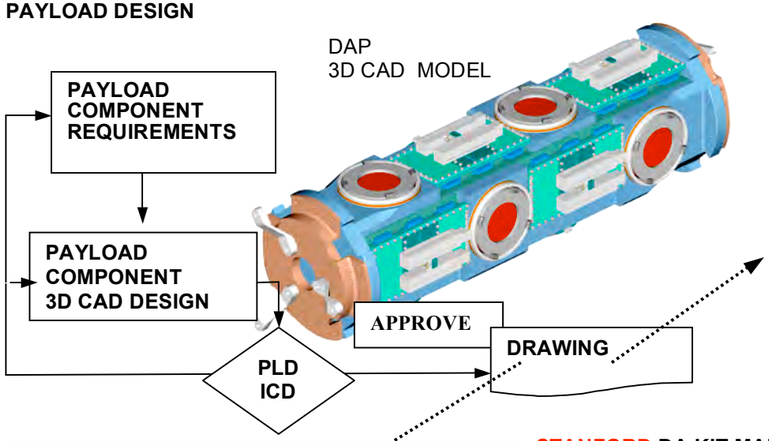

PAYLOAD DRAWING TREE ELEMENTS

DRAWING NUMBER						DESCRIPTION
DWG-	EM-	10-0	000	0000	-00	SCIENCE INSTRUMENT
DWG-	EM-	20-0	000	0000	-00	DEWAR
DWG-	EM-	30-0	000	0000	-00	THRUSTER
DWG-	EM-	40-0	000	0000	-00	PAYLOAD ELECTRONICS
DWG-	EM-	50-0	000	0000	-00	PAYLOAD VALVING ASSEMBLY
DWG-	EM-	60-0	000	0000	-00	PAYLOAD I & T GSE

MBS Kit Drawing Tree Elements

DRAWING NUMBER						DESCRIPTION
DWG-	**EM-**	**11-1**	**1200**	**0000**	**-00**	**Magnetic Bearing System (MBS) Kit**
DWG-	EM-	11-1	1210	0000	-00	I-MBS Kit
DWG-	EM-	11-1	1211	0000	-00	I-MBS w/ Cables
DWG-	EM-	11-1	1211	1000	-00	I-MBS Coil w/ Overcoat
DWG-	EM-	11-1	1211	1100	-00	I-MBS Housing
DWG-	EM-	11-1	1211	1200	-00	I-MBS Mask Kit
DWG-	EM-	11-1	1211	1210	-00	I-MBS Mask A
DWG-	EM-	11-1	1211	1220	-00	I-MBS Mask B
DWG-	EM-	11-1	1211	1230	-00	I-MBS Mask C
DWG-	EM-	11-1	1211	2000	-00	I-MBS Cable Kit
DWG-	EM-	11-1	1211	2100	-00	I-MBS PEEK Connector Plug
DWG-	EM-	11-1	1211	2200	-00	I-MBS Cable A Assembly
DWG-	EM-	11-1	1211	2210	-00	I-MBS Cable A Outer Casing
DWG-	EM-	11-1	1211	2220	-00	I-MBS Cable A Conductor A1
DWG-	EM-	11-1	1211	2230	-00	I-MBS Cable A Conductor A2
DWG-	EM-	11-1	1211	2240	-00	I-MBS Cable A Bulkhead Fitting, Male
DWG-	EM-	11-1	1211	2250	-00	I-MBS Cable A Anchor
DWG-	EM-	11-1	1211	2300	-00	I-MBS Cable B Assembly
DWG-	EM-	11-1	1211	2310	-00	I-MBS Cable B Outer Casing
DWG-	EM-	11-1	1211	2320	-00	I-MBS Cable B Conductor B1
DWG-	EM-	11-1	1211	2330	-00	I-MBS Cable B Conductor B2

Inner MBS Assembly

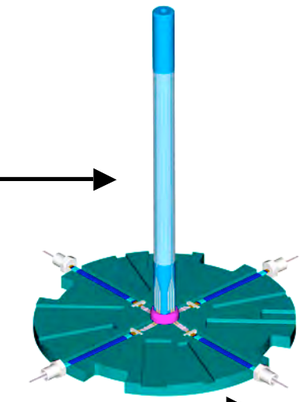

STANFORD DA KIT MANUFACTURING

STANFORD DA MANUFACTURING

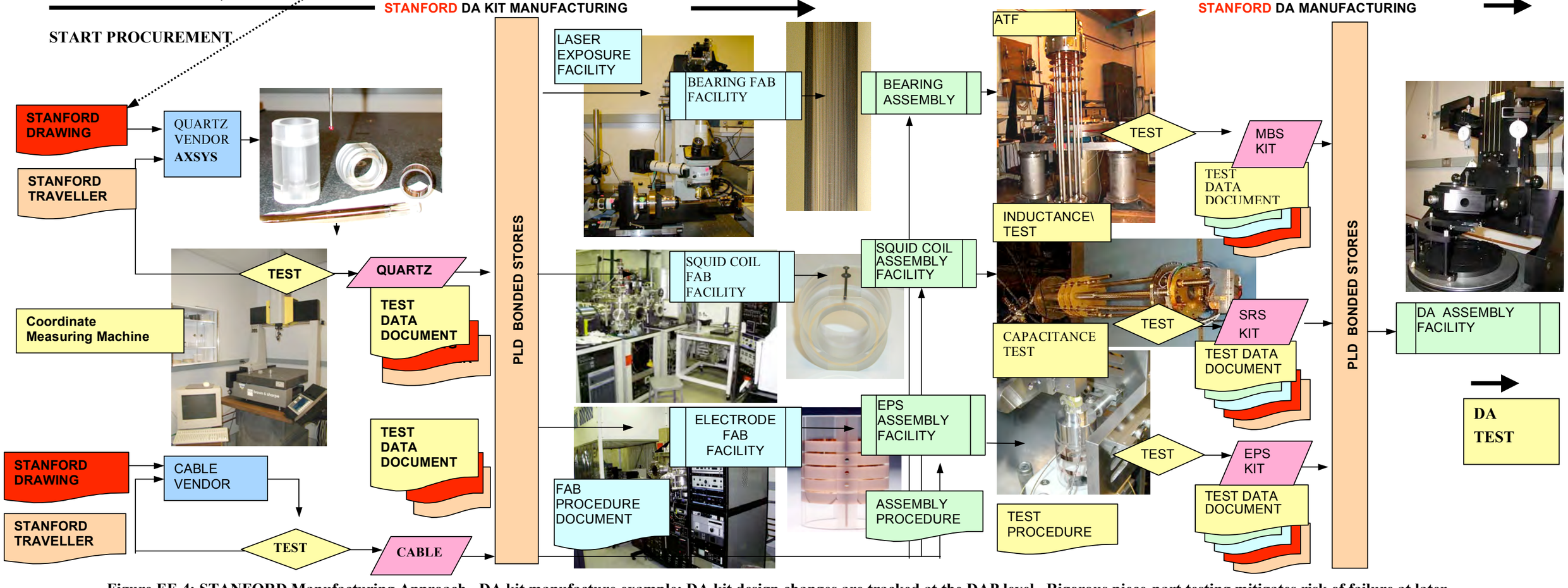

Figure EF-4: STANFORD Manufacturing Approach. DA kit manufacture example: DA kit design changes are tracked at the DAP level. Rigorous piece-part testing mitigates risk of failure at later stages of DA manufacturing. DA kits are defined to allow piece-part testing prior to delivery for DA assembly –this also applies to the European DA kits that are to be delivered to STANFORD.