STEP – The Satellite Test Of the Equivalence Principle

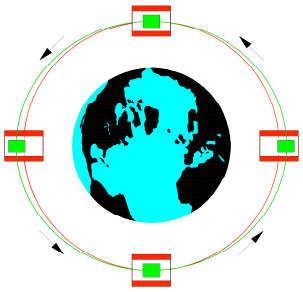

Principal Investigator: C. W. F. Everitt, Stanford University

A collaboration of Stanford University and NASA MSFC with international support, STEP will compare the rate of fall of test masses in a drag-free satellite in low earth orbit providing a robust test of the cornerstone of General Relativity and modern gravitational theory, the identity of gravitational and inertial mass.

Technology investment by NASA has developed the STEP mission into a low-cost, flight-ready program.

B. FACT SHEET

B.1 Science Objective

STEP will advance the testing of the Equivalence Principle by more than 5 orders of magnitude, to 1 part in 10^{18}. Four pairs of optimally chosen test masses and multiple systematic error checks will enable a robust measurement.

B.2 Mission Overview

Launch Date – June, 2013
Orbit – 550km sun-synchronous inclination 97.6°
Eclipse Free through Mission Duration after set up phase
Eccentricity – <2%
Mission Duration – 6 months
Telemetry – S-Band, IONET
Poker Flat and Svalbard Ground Stations
Stanford Mission Operations Center
Launch Vehicle – Indian Supplied PSLV
Launch Capability – 1600 kg
Injected Mass – 819 kg including reserve
Launch Margin – 95%

B.3 Science Payload

Cryogenic Payload
- Qualified Superfluid Helium Dewar Design
- Aerogel Helium Confinement

[a] Four Differential Accelerometers
- Redundant SQUID and Electrostatic Readout
- Superconducting Magnetic Bearings
- Optimally Chosen Test Masses

Flight Electronics design concepts verified

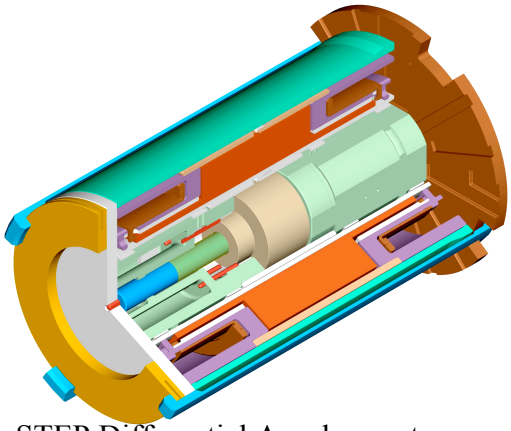

STEP Differential Accelerometer

B.4 Spacecraft

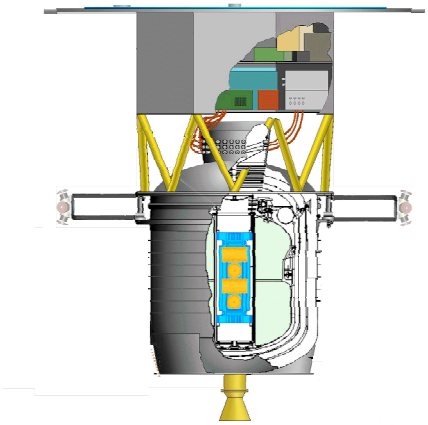

Flight qualified Surrey Satellite Technology Spacecraft Bus
ESA Phase A Service Module Feasibility Study Complete
Low Cost. Selected Redundancy
Passive Thermal Control
GaAs Solar Array 360 W
Dual 5 W S-band Tranceivers
Separate Service Module and Payload Electronics Mounts for Simplified Integration
Flight Proven Drag Free/Attitude Control system
Thrust Provided by Helium Boil-off From the Dewar
Mature Interface Control

B.5 E/PO

PI Lead w/ Science Team and MSFC Support
Managed by experienced E/PO director -
Dr. Shannon Range
$ 700k Budget
Vigorous Program with
Connections to Schools,
Museums and Media
Ranges from Fundamental
Science Concepts to
Innovative Technology
Large Presence in Under-
served Communities
Uniquely Accessible Experiment Concept

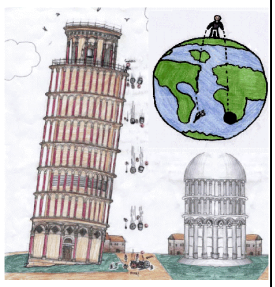

B.6 Mission Management

Experienced PM - Gaylord Green
Integrated Product Team Structure
Clear lines of Authority and Responsibility
Stanford
– PI responsible for Mission Success
– Program Manager leads Implementation
MSFC
– Supports program management
– Supports Safety and Mission Assurance
Teledyne Brown Engineering
– Leads Systems Engineering
Established, Well Integrated Science Team

B.7 Schedule

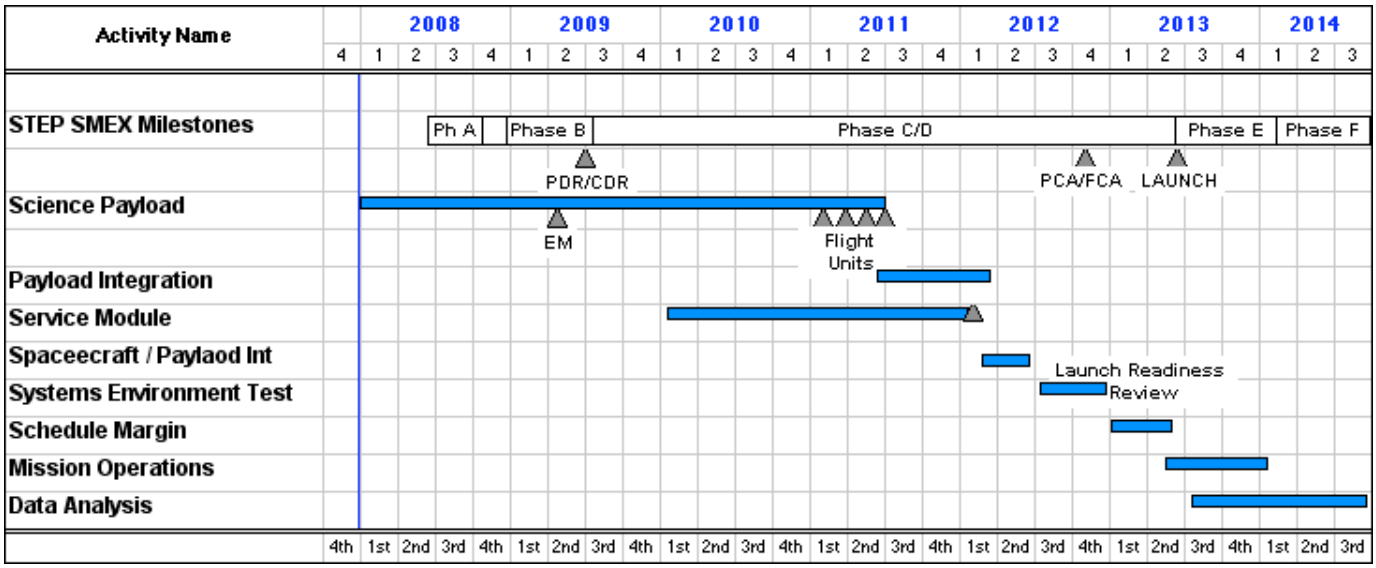

B.8 Cost Estimate

NASA Funding is leveraged by UK, German and Indian contributions.

Element	Cost ($FY'08)	Schedule
Phase A/B+bridge	8,512,281	6/08-6/09
Phase C/D	66,059,975	6/09-6/13
Phase E/F	6,162,015	6/16-9/14
Total PI Cost	79,185,336	
Total w/30% reserve	**102,940,937**	6/08-9/14
Contributions	39,400,000	
Contrib w/30% reserve	51,220,000	
Total Mission	154,160,937	
• Includes 5 Months Funded Schedule Reserve		

B.9 Key Margins

Parameter	Requirement	Margin
Mass	819 kg	95%
Power	300 W	20%
PLD Processor	11.52 mips	108%
OBMU Memory	448 Kwords	52%
Downlink Data Rate	232.5 kbps	500%
Downlink SNR	10.5dB	9dB
Dewar Life	6 Months	33%
Vibration	>10Hz	170%